Installing SnoClip™ 2.0 II & III

Providing *The Right Way*™ to attach virtually anything to metal roofs worldwide.

S-5!® *The Right Way*

ATTENTION! This document is a guide only. This product may not be suitable for every application. The user is responsible for all necessary application engineering and design. Please scan the QR code to the right for additional information, warnings and disclaimers regarding product use.

You can also view load test results at www.S-5.com where applicable, or contact your S-5!® distributor for more information.

SnoClip 2.0 can be added to ColorGard® 2.0 to slow the migration of snow and ice beneath the crossmembers. Simply hinge it onto the crossmember during or following installation and secure the fastener to engage the SnoClip 2.0 foot onto the roof.

SnoClip 2.0 II	SnoClip 2.0 III
Designed for Seam Heights of 1" - 2"	Designed for Seam Heights of 2" - 3¼"

Tools Required

- ❑ Screw Gun
- ☑ T30 Torx Bit [PROVIDED]
- ☑ T30 Screw [PROVIDED]

Determining Correct SnoClip 2.0 Component

Be sure you are using the correct SnoClip 2.0 component for your ColorGard 2.0 assembly. Use of the incorrect SnoClip 2.0 component can result in damage to the snow retention system or roof. When installing ColorGard 2.0 with SnoClip 2.0, be sure that the toe of the SnoClip 2.0 part bears on an area of the roof panel that is well supported and not subject to excessive deflection.

How To Install SnoClip 2.0 II & III

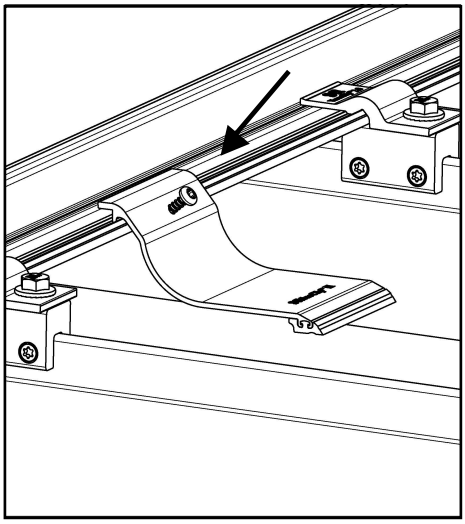

1. Determine the correct SnoClip 2.0 component for your ColorGard 2.0 system.
2. If using one SnoClip 2.0 per panel, center it on the crossmember between two clamps/brackets. If using two or more SnoClips per panel, space them evenly between the clamps/brackets to ensure uniform support.
   Important: *SnoClip 2.0 should be placed between panel striations, not on top. Do not install SnoClip where it cannot fully engage the crossmember, including at or near the small gaps created by the splices.*
3. Hinge the SnoClip 2.0 directly onto the crossmember. When applying downward pressure on the part, the toe of the rubber foot will engage the surface of the panel just before the heel.
4. Drive the included fastener through the prepunched hole in the SnoClip 2.0 to secure it to the crossmember using the T30 bit. Tighten the screw until the head is fully seated against the SnoClip 2.0.
   Note: *If the screw head shears during installation, do not be alarmed, as it will not inhibit proper function.*

Important Notice! When installing any S-5! snow retention assembly with SnoClip, be sure that the toe of the SnoClip part bears on an area of the roof panel that is well supported and not subject to excessive deflection. Should panel deflection be excessive under load allowing the SnoClip to rotate under the ColorGard, then SnoClips should not be used.

Note: Any S-5! warranty and/or calculation may be void if hardware is used that was not furnished by S-5! directly or through one of their licensed distributors or any assembly that has not been tested by S-5! These instructions are for use by those experienced in the trade. Always follow appropriate safety precautions and use appropriate tools.

S-5!® Warning! Please use product responsibly!

S-5!® Warning! Please use this product responsibly! Products are protected by multiple U.S. and foreign patents. For published data regarding holding strength, fastener torque, patents and trademarks, visit the S-5! website at www.s-5.com. Copyright 2026, Metal Roof Innovations, Ltd. S-5! products are patent protected. S-5! aggressively protects its patents, trademarks and copyrights. 052126

www.s-5.com
888-825-3432